3900 SERIES
INSULATED CONTROL DAMPERS
3960 | 3961 | 3965

3960
Duct-Mount

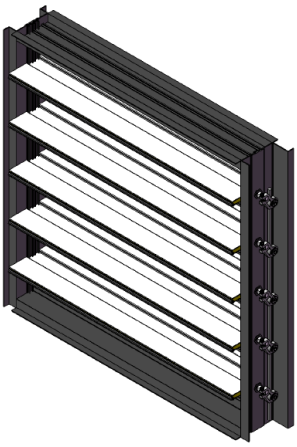

3961 Quick 'N' Stall
Duct-Mount

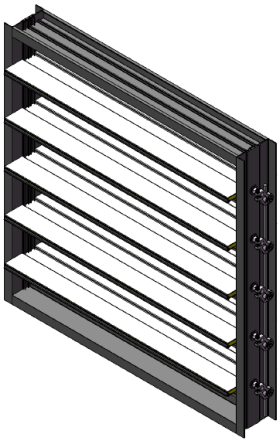

3965
Flanged-to-Duct

STANDARD CONSTRUCTION

Depth: 4" *(101 mm)* – 3960/3965
5.25" *(133 mm)* – 3961
Depth with Blades Open: 6.125" *(156 mm)*
Minimum Height: 8" *(203 mm)* - Single Blade
15" *(381 mm)* - Multiple Blade
Maximum Panel Width: 48" *(1219 mm)*
Maximum Panel Height: 60" *(1524 mm)*
Maximum Panel Size: 20 Sq.Ft.
Maximum System Pressure: 4" w.g. *(1 kPa)*
Operating Temperature Range: -40° to +180° F
Standard Finish: Mill
Standard Motor Installation: 6" Side Shaft Direct Drive
Linkage: Concealed in Frame (3960/3961)
Outside of Frame (3965)

AVAILABLE ACCESSORIES

- **Factory Supplied/Installed Actuators**
- **End Switch for signaling peripheral devices**
- **Jack Shaft**
- **Hand Quadrants**
- **Chain Operation for manual operation spring closed**
- **Silicone Blade and Jamb Seals – Specify 3900SI**
- **Salt Water Construction – Specify 3900SW**
- **Available finish: Clear Anodized**
- **Frame Insulation: Polystyrene Insulation**

PARALLEL BLADE (PB)

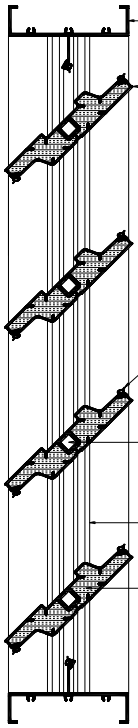

FRAME: 0.081" Extruded 6063-T5 Aluminum

BLADE: 0.063" Extruded 6063-T5 Aluminum

BEARINGS: Celcon inner bearing within a Polycarbonate outer bearing

BLADE SEALS: Santoprene

AXLES: 3⁄8" Aluminum Square Bar

JAMB SEALS: Santoprene

BLADE INSULATION: High density polyurethane non-CFC foam (R-2.25) - Blades are thermally broken

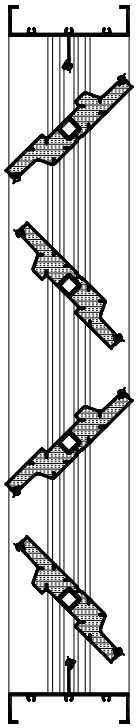

OPPOSED BLADE (OB)

DWG. 3960-3961-3965 *JAN 2020*

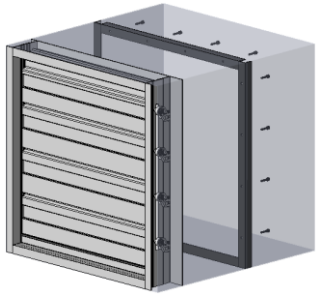

3960 – Duct-Mount

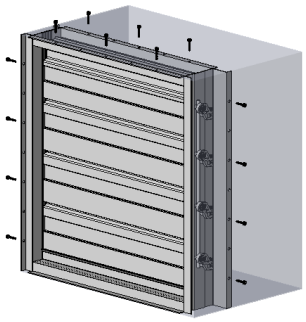

3961 – Duct-Mount

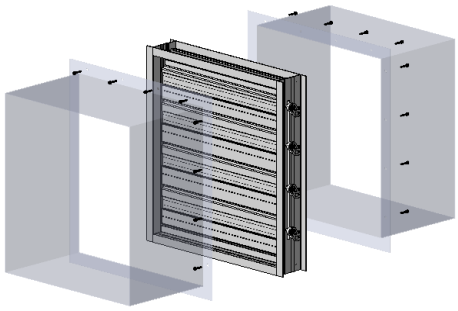

3965 – Flanged-to-Duct

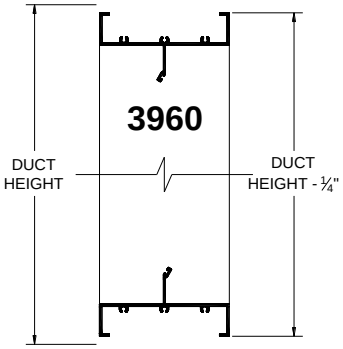

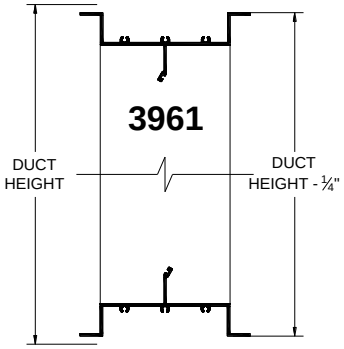

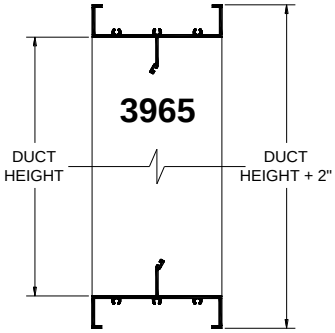

For Duct-Mount Frame specify: *3960 / 3961*
For Flanged-to-Duct Frame specify: *3965*

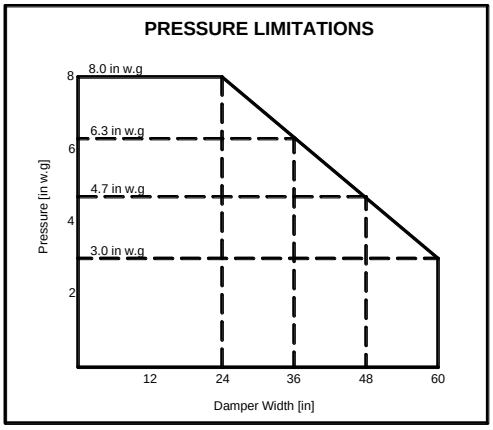

RECOMMENDED SPECIFICATION

Furnish and install control damper models 3960 / 3961 / 3965 as manufactured by Alumavent, Bolton Ontario. Dampers shall be 4" *(101 mm)* deep. Blades shall be 0.063" *(1.60 mm)* thick, thermally broken with high density Polyurethane non-CFC injected foam insulation. Frame shall be 0.081" *(2.06 mm)* thick, with polystyrene insulation. Axles shall be 0.375" *(9.53 mm)* thick, Aluminum square bar. Blade and Jamb seals shall be Santoprene. Linkage is concealed in frame for models 3960 / 3961 and outside of frame for model 3965. Air leakage through a 36"x36" *(914 mm x 914 mm)* damper shall not exceed 3 CFM/ft^2 *(15.2 L/s/m^2)* against 4" w.g *(1.0 kPa)* static pressure at standard air (as per AMCA testing). Operating temperature range shall be -40° to +180° F.

DWG. 3960-3961-3965 *JAN 2020*

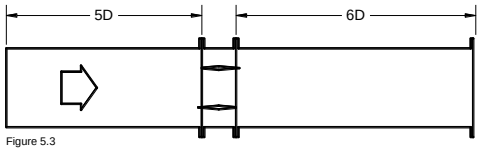

Figure 5.3

3900 SERIES CONTROL DAMPER PRESSURE DROP	
Velocity [FPM]	**Pressure Drop [in. w.g]**
12x12 (inches)	
553.6	0.044
891.4	0.119
1051.9	0.161
2021.4	0.554
2221.7	0.740
24x24 (inches)	
536.8	0.014
776.9	0.025
1101.1	0.056
2066.3	0.182
2530.1	0.272
36x36 (inches)	
500.4	0.01
750.6	0.021
1006.1	0.036
2019.5	0.161
2526.6	0.249
12x48 (inches)	
545	0.008
772.8	0.018
1095.3	0.035
2055.5	0.126
2519.2	0.187
48x12 (inches)	
544.6	0.029
772.2	0.064
1094.4	0.1228
2053.1	0.439
2516	0.661

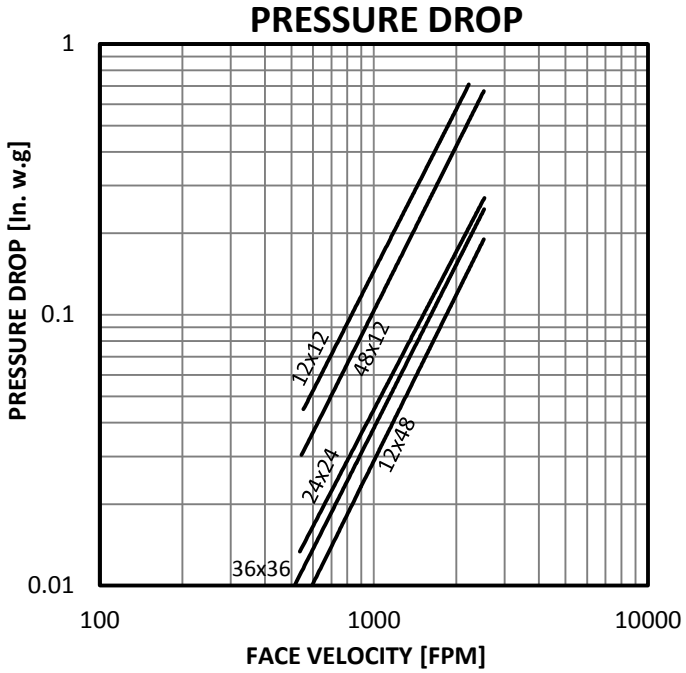

Ratings Based on: AMCA Standard 500-D Intake Ducted Test Figure 5.3 Setup

DEFINITION OF LEAKAGE CLASSIFICATION				
CLASS	**LEAKAGE ft³/min/ft² *(L/s/m²)***			
	1" *(0.25 kPa)*	**4" *(1.0 kPa)***	**8" *(2.0 kPa)***	**12" *(3.0 kPa)***
1A	3 *(15.2)*	N/A	N/A	N/A
1	4 *(20.3)*	8 *(40.6)*	11 *(55.9)*	14 *(71.1)*
2	10 *(50.8)*	20 *(102)*	28 *(142)*	35 *(178)*
3	40 *(203)*	80 *(406)*	112 *(569)*	140 *(711)*

3900 SERIES CONTROL DAMPER LEAKAGE RATING			
DAMPER SIZE Width x Height	**PRESSURE in w.g (kPa)**		
	1" *(0.25 kPa)*	**4" *(1.0 kPa)***	**8" *(2.0 kPa)***
12"x12" *(305x305 mm)*	1A	1	1
24"x24" *(610x610 mm)*	1A	1	1
36"x36" *(914x914 mm)*	1A	1	1
12"x48" *(305x1219 mm)*	1A	1	1
48"x12" *(1219x305 mm)*	1A	1	1
48"x36" *(1219x914 mm)*	1A	1	1

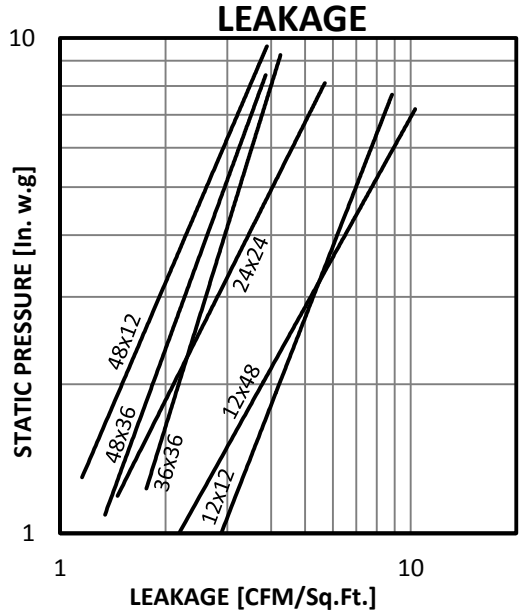

Leakage test was conducted in accordance with AMCA Standard 500-D-98. Holding torque applied was 6 in.-lbs./sq.ft on parallel blade dampers. AMCA Standard 500-D-98 states that air leakage is based on operation between 50°F *(10°C)* and 104°F *(40°C)*.

DWG. 3960-3961-3965 *JAN 2020*